PARTS LIST			
ITEM	QTY	PART NUMBER	MATERIAL
1	1	Outer ring	Stainless Steel
2	1	Inner ring	Stainless Steel
3	8	Ball	Stainless Steel
4	2	Cage	Stainless Steel

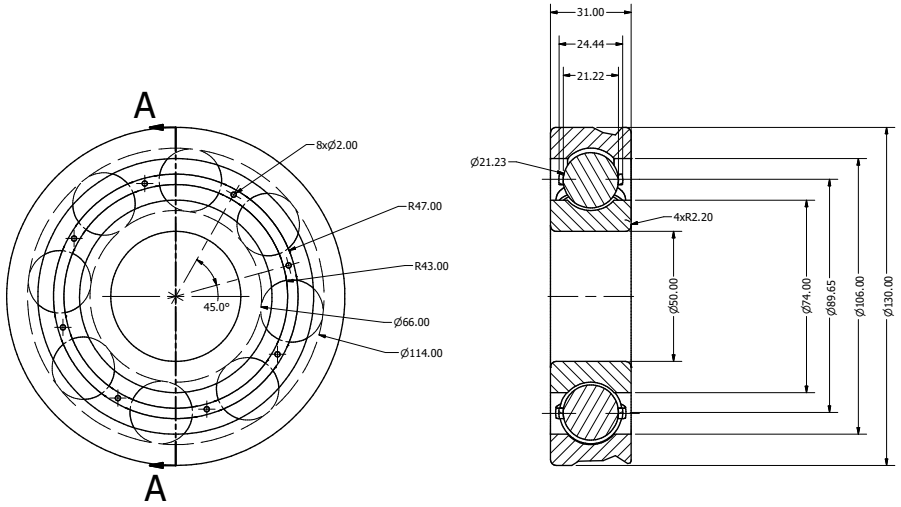

SECTION A-A
SCALE 1 : 1

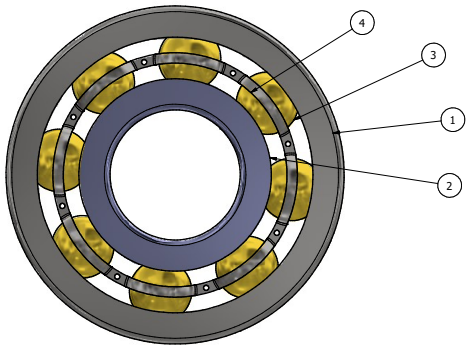

Assembly
SCALE 1 : 1

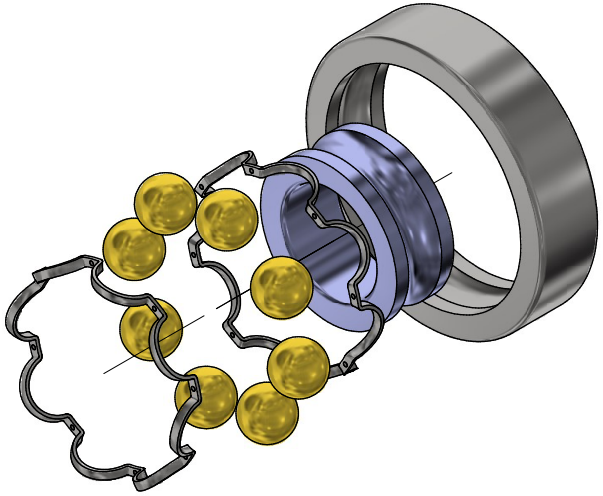

Presentation View
SCALE 1 : 1

DRAWN Kacper Szczykno	4/21/2026	
CHECKED		TITLE BALL BEARING
QA		
MFG		
APPROVED		SIZE D / DWG NO Assembly / REV
		SCALE 1 : 1 / SHEET 1 OF 1